Parameters and Layout of JAKA Zu® 3

Payload	3kg
Weight（W cabel）	12kg
Work radius	626mm
Repeatability	±0.02mm
Axis	6
Programming	Graphical programming, free-drive
Teach pendant	MT（PAD/Mobile）APP
Colaborative operation	Accordance with GB 11291.1-2011

Robot	Work scope	Max speed
Joint 1	±360°	180°/s
Joint 2	-85°,+265°	180°/s
Joint 3	±175°	180°/s
Joint 4	-85°,+265°	220°/s
Joint 5	±360°	220°/s
Joint 6	±360°	220°/s
Max speed	/	1.5m/s

Range power	150W
Temperature range	0-50°C
IP Specification	IP54
Installation	Installation at any angle
Tool I/O	Digital input 2 Digital output 2 Analog input 1
Tool I/O power	24V
Tool I/O size	M8
Materials	Aluminum, PC
Base diameter	129mm
Cable length	6m

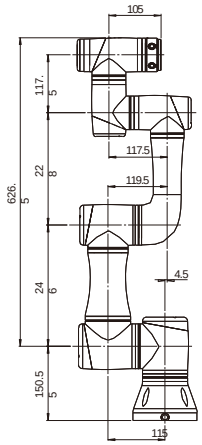

JAKA Zu® 3 work radius

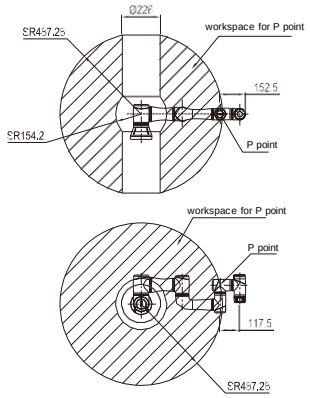

JAKA Zu® 3 P point front view / top view

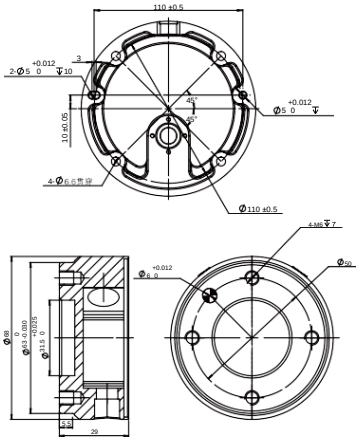

JAKA Zu® 3 base / flange